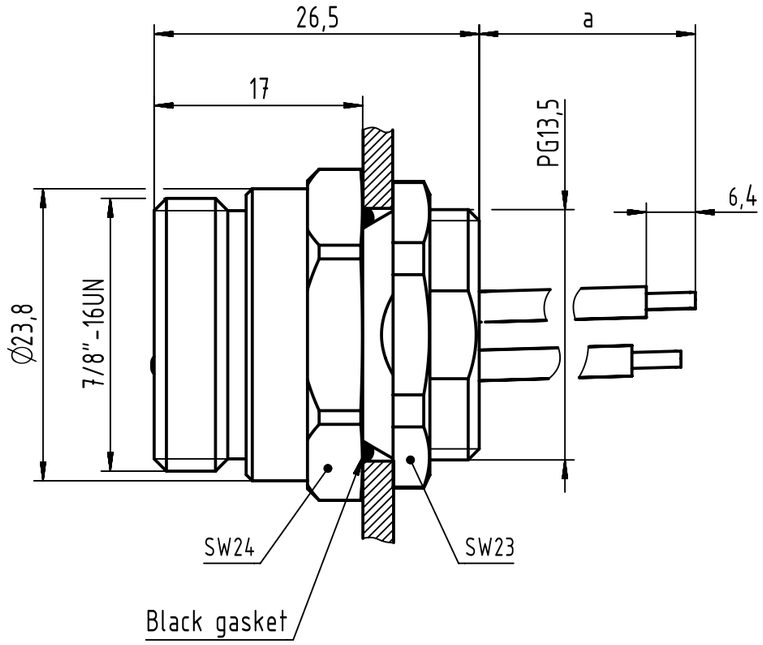

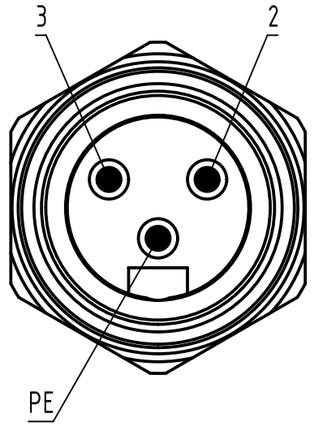

Panel cut out

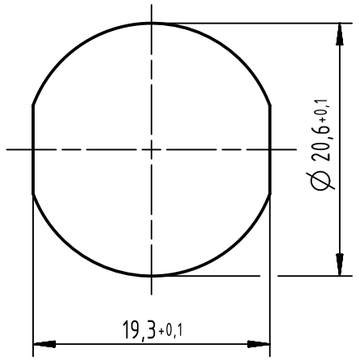

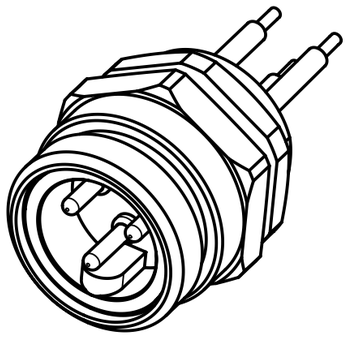

Loading plan

PE	green/yellow
2	brown
3	blue

Cont. No.	Part - no.	Type of cable	Dim. a[m]	Tolerance [m]
1	21043161305	3xAWG18, PVC	0.2	0.02

All Dimensions in mm
Original Size DIN A3

Scale 2:1

Free size tol.

Ref.

Sub.

All rights reserved

Department EC PD - RO

HARTING Electronics GmbH
D-32339 Espelkamp

Created by	Inspected by	Standardisation	Date	State
TOMUTA	STOICA	HOFFMANN	2014-09-09	Final Release

Title 7/8" Cable Assembly

Doc-Key / ECM-Nr. 100535527/UGD/000/C 500000079499

Type TB

Number 21043161305

Rev. C

Page 1/1

A3