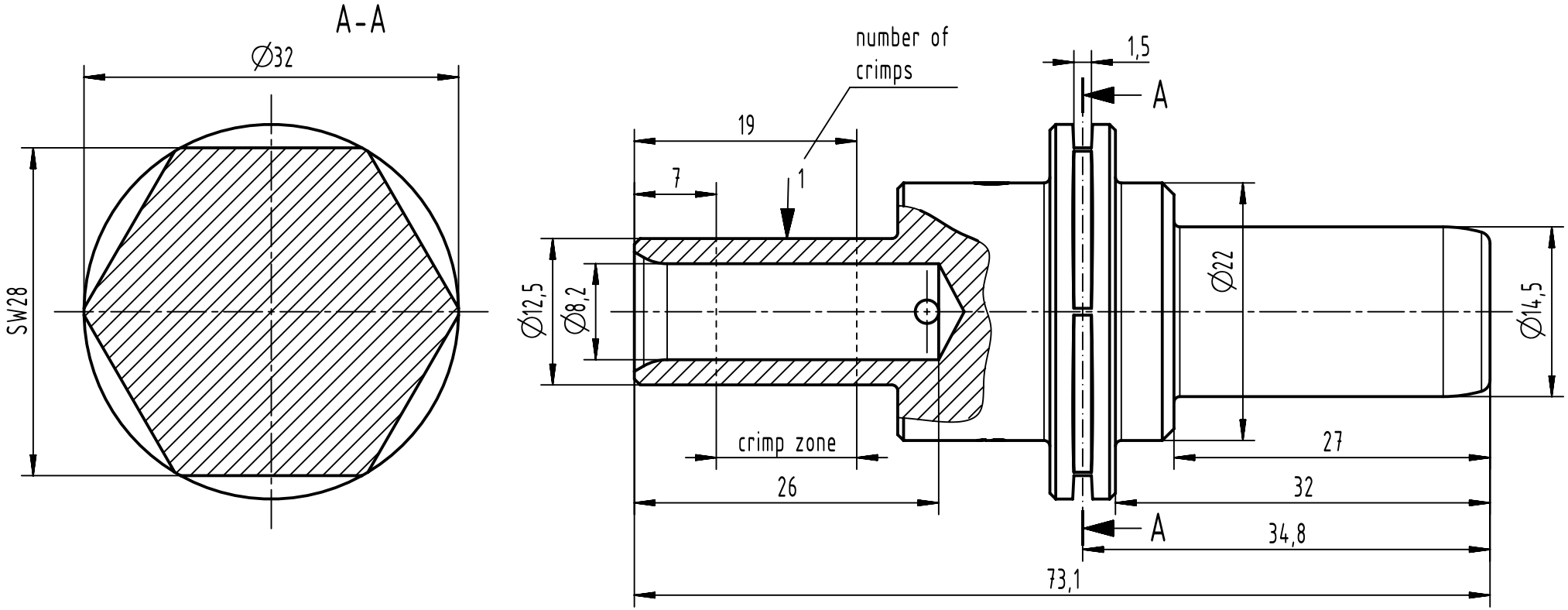

crimp zone acc. to DIN EN 46235; indicator 12
for stranded fine wire acc. to VDE 0295 class 5 / IEC 60228 class 5
wire gauge: 35mm²
stipping length: 26mm

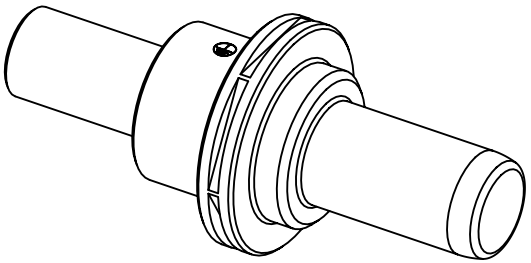

All Dimensions in mm Original Size DIN A4	Scale 2:1	Free size tol.		Ref. Sub.	
All rights reserved Department EL PD	Created by HELLMANN	Inspected by RIEPE	Standardisation SAP_WFRT	Date 2022-09-21	State Final Release
HARTING D-32339 Espelkamp	Title Han TC350 PE male contact 35mm²				Doc-Key / ECM-Nr. 100639145/UGD/001/B 500000224798
	Type TB	Number 09 11 000 6172		Rev. B	Page 1/1

A4