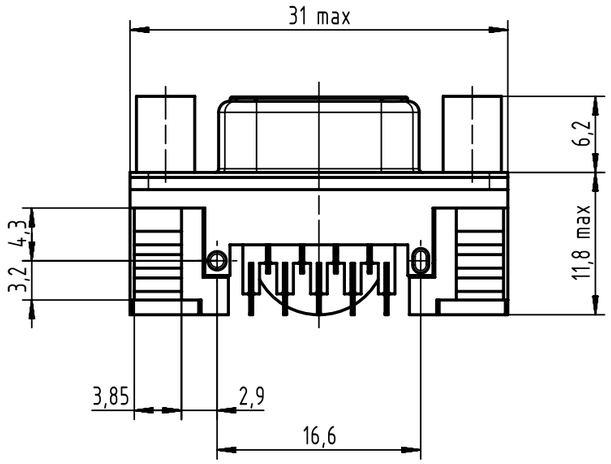

PCB layout, component side (thickness 1,6 min)

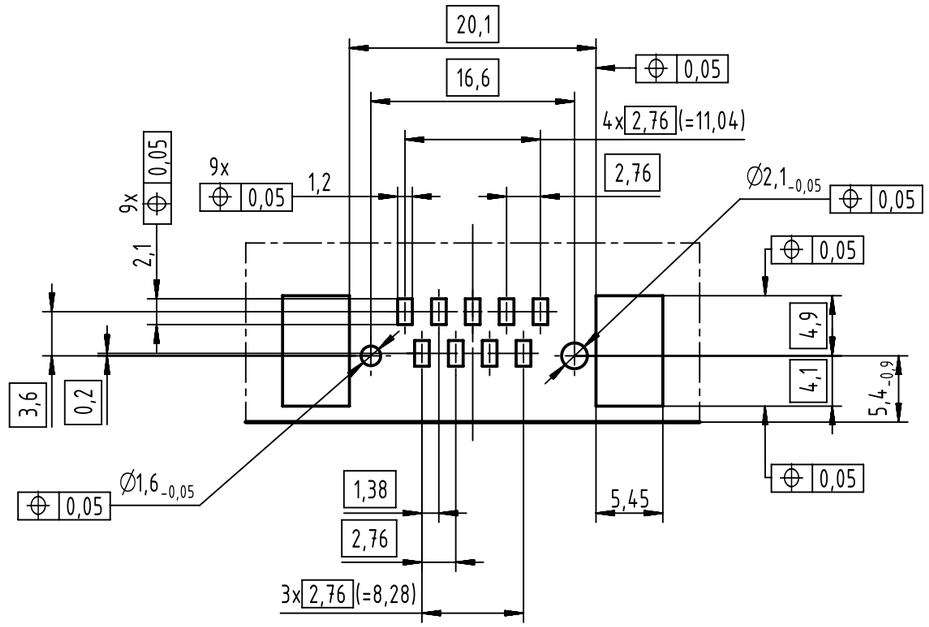

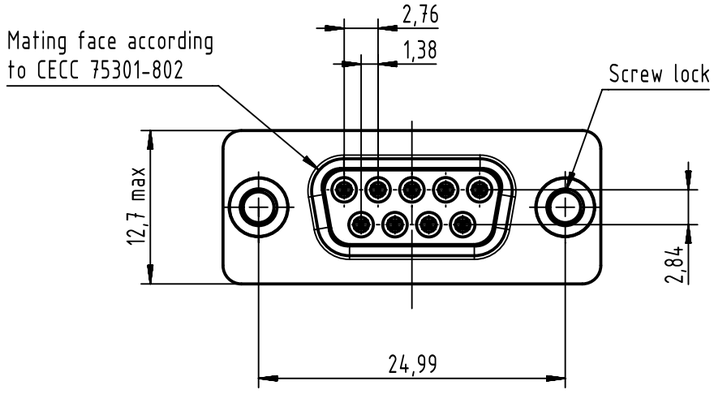

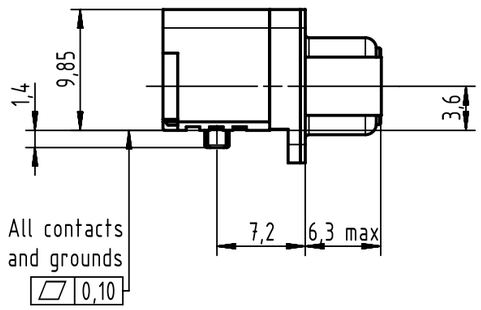

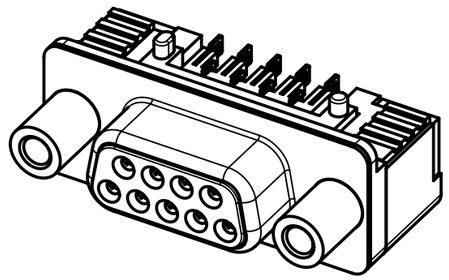

Max. Temperature: 260°C during 10 seconds.
Find further technical information on DS 09550200301.

Part number	PL	Screw lock	Index designation	
0955 156 6620 333	2	4-40 UNC	Black insulator	Samples
0955 156 3620 741	1			Reel packaging (160 connectors)
0955 156 6620 741	2			
0955 156 7620 741	3			

All Dimensions in mm
Original Size DIN A3

Scale 2:1 | Free size tol. | Ref. | Sub.

All rights reserved

Department EC PD - CN

HARTING Electronics GmbH
D-32339 Espelkamp

Created by	Inspected by	Standardisation	Date	State
ZENGD	LUOK	HOFFMANN	2016-08-29	Final Release

Title: D-Sub angled low-profile SMT 9-pole fem ass with screw lock

Doc-Key / ECM-Nr.: 100511747/UGD/003/B 500000107668

Type: TB | Number: 0955156X620 | Rev.: B | Page: 1/1

A3