Alle Rechte vorbehalten/ *All rights reserved*

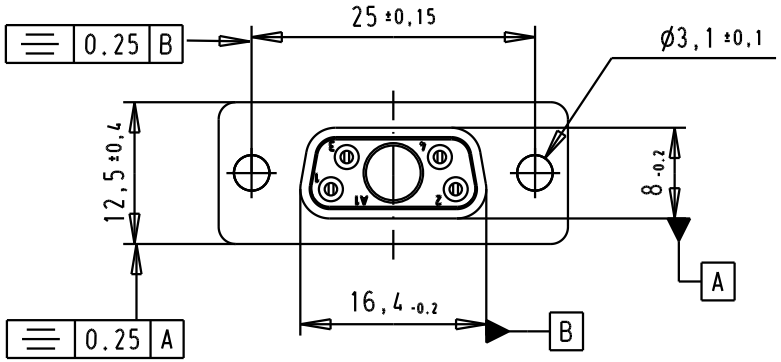

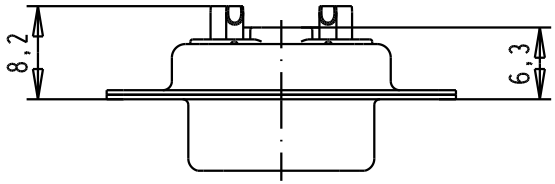

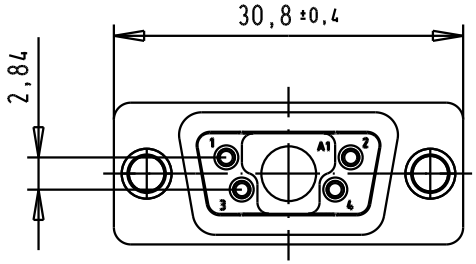

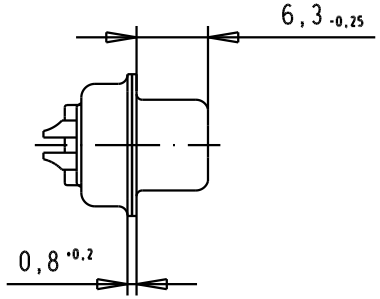

Solder bucket for AWG20 Max

09 69 101 7051	PL3
09 69 101 5051	S4
part number	performance level

33100	15/09/05	JMDR
Mod.	Dat.	Name

	Dat.	Name
Detail.	15/09/05	JMDR
Insp.		
Stand.		

All Dim. in mm
Orig. Size DIN A 4

HARTING EURL
F-95972 Paris

D-Sub Female, straight, 5W1 without power contact, solder buckets, tin plated shell with holes

Maßstab/ *Scale* 1,5 : 1

TB 09 69 101 x051

Sub.

Blatt/ *Page* 1/1