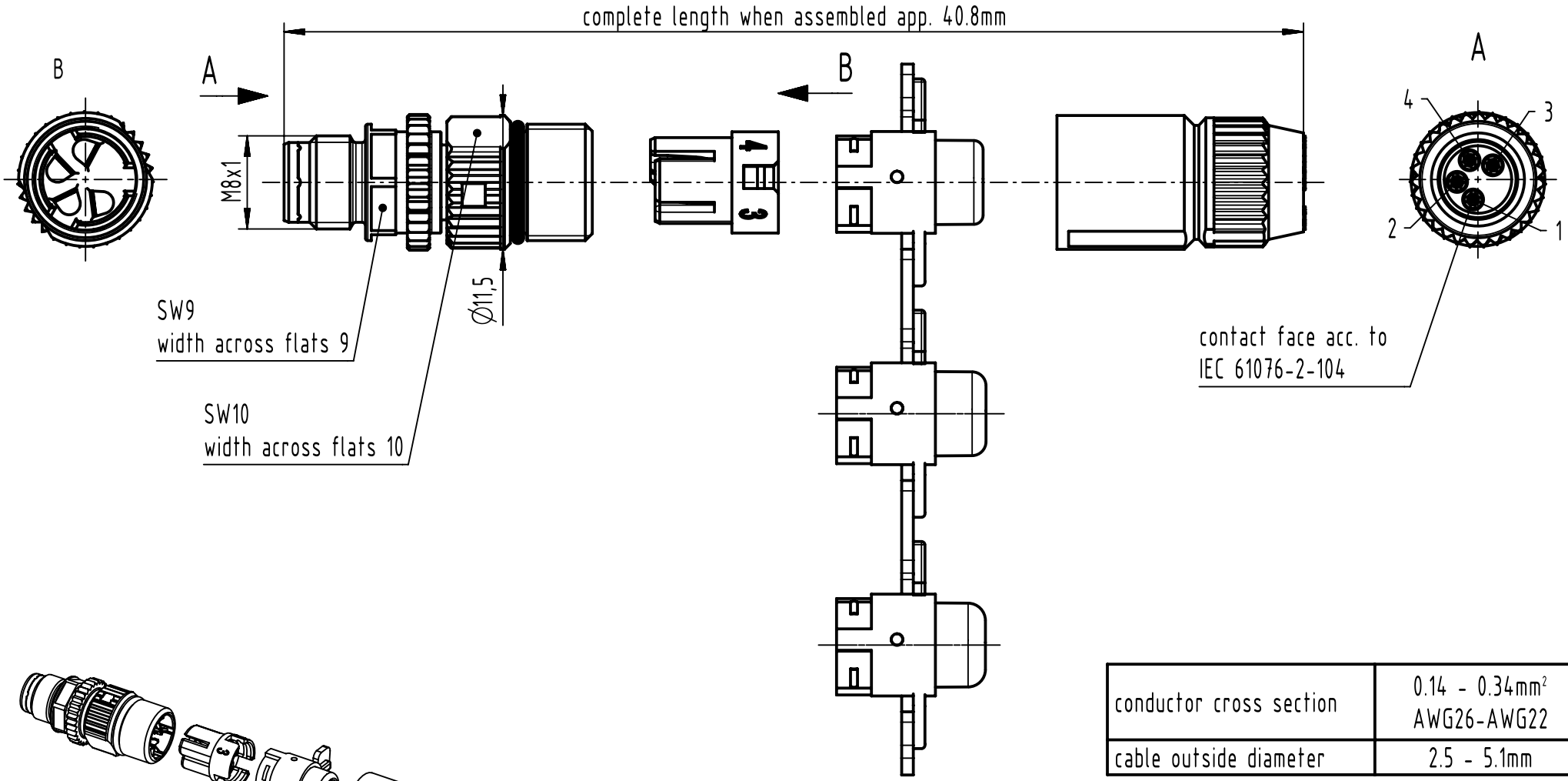

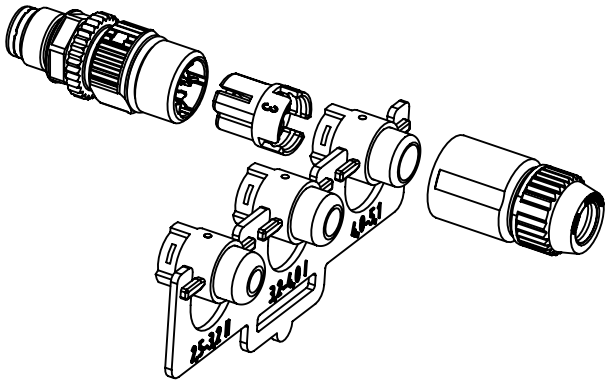

conductor cross section	0.14 - 0.34mm² AWG26-AWG22
cable outside diameter	2.5 - 5.1mm

All Dimensions in mm
Original Size DIN A4

Scale 2:1

Free size tol.

Ref.

Sub.

All rights reserved

Department EL PD

HARTING
D-32339 Espelkamp

Created by	Inspected by	Standardisation	Date	State
105120	bussmannt		08-Oct-2025	40 - Released

Title M8-S-CC-IDC-4P-ACOD-M-STR

Doc-Key / ECM-Nr. DS00189744

Type	Design Number	SAP Mat. Number	Rev.	Page
TB	DS00189744	21021511405	K	1/1

A4