lightnet

Lightnet GmbH
Zollstockgürtel 65
50969 Köln / Germany
Tel.: +49 (0) 221 22 25 26-0
E-Mail: info@lightnet.de
www.lightnet.de

MATRIC SX | SYSTEM 40MM FLOOR ONE HEAD

1. MONTAGE UND INSTALLATION | MOUNTING AND INSTALLATION:

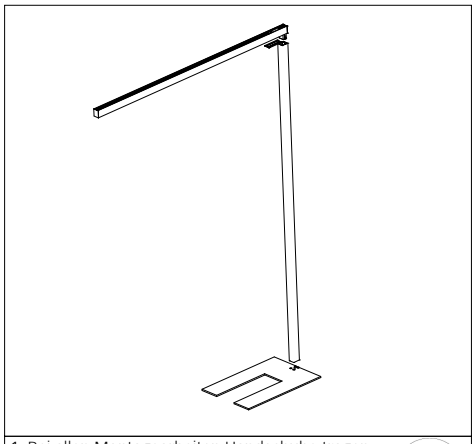

1. Bei allen Montagearbeiten Handschuhe tragen.
Use gloves when handling the fixture.

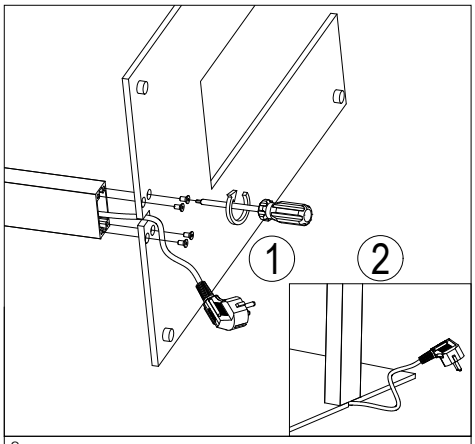

2.

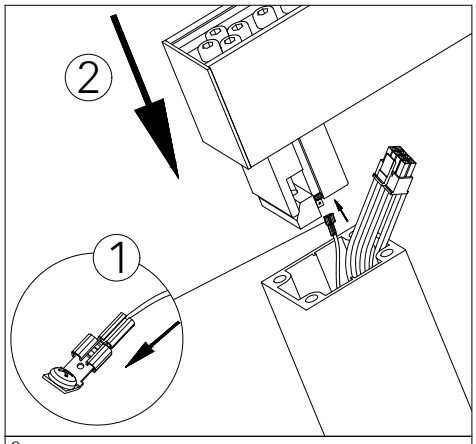

3.

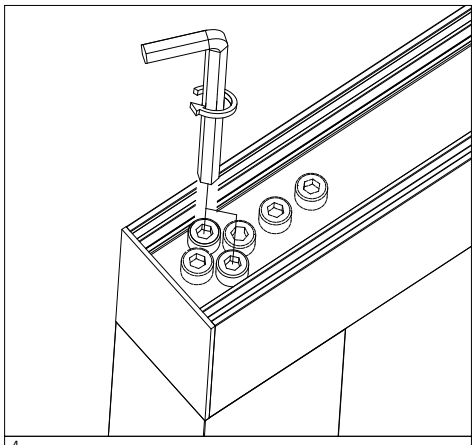

4.

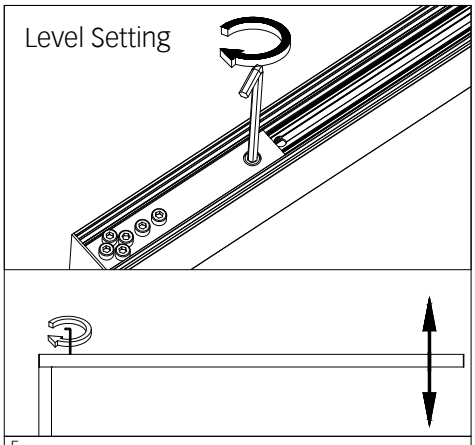

5.

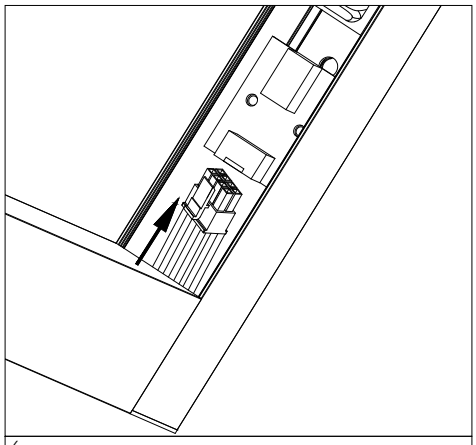

6.

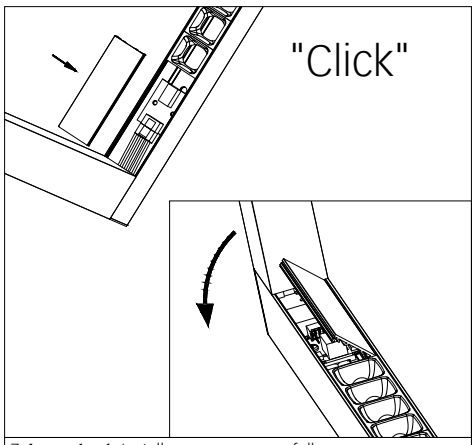

7. **Important:** Install cover - very carefully.

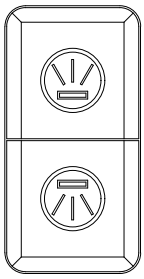

Button indirect light:
<0,5s - On/Off function
>0,5s - dimming the light

Button direct light:
<0,5s - On/Off function
>0,5s - dimming the light

8.

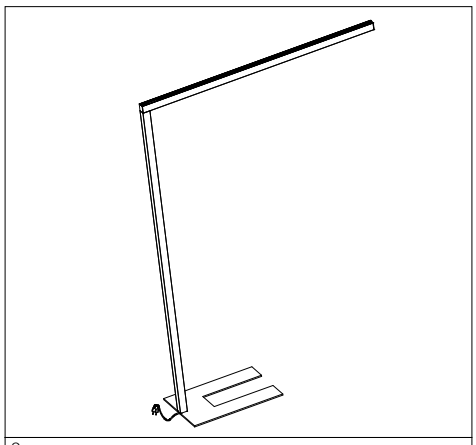

9.

The light source contained in this luminaire shall only be replaced by the manufacturer or his service agent or a similar qualified person.