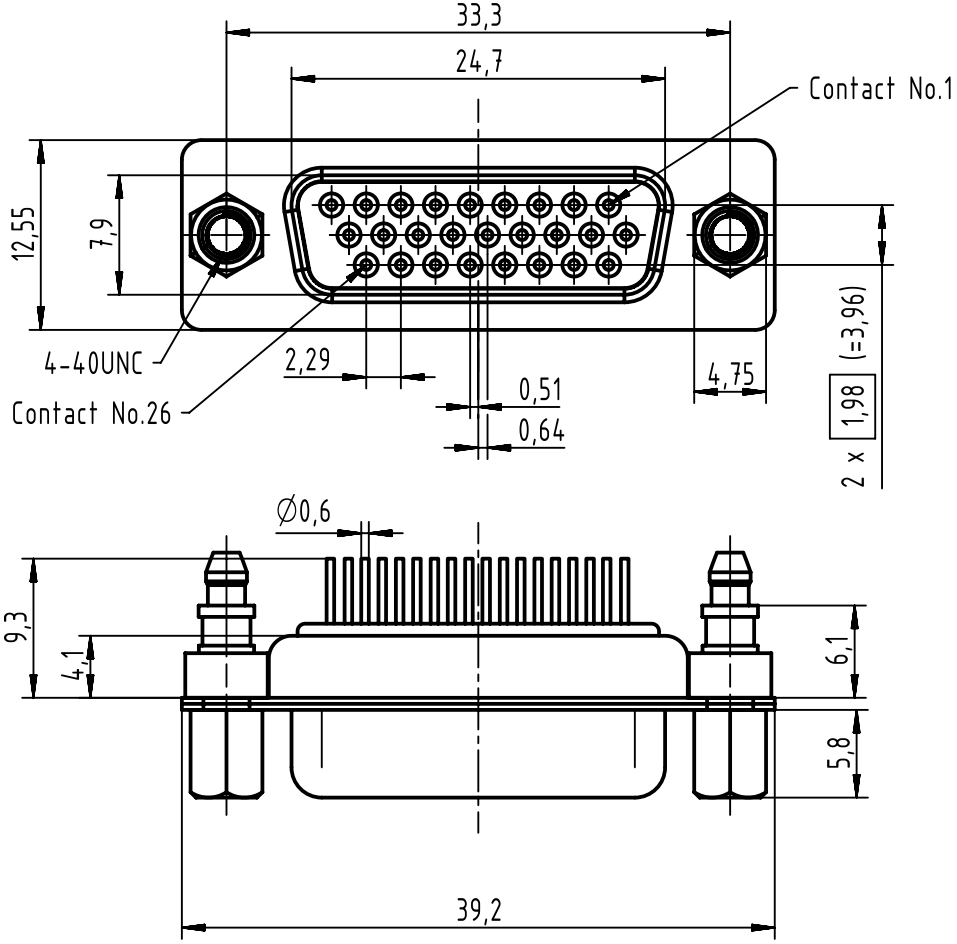

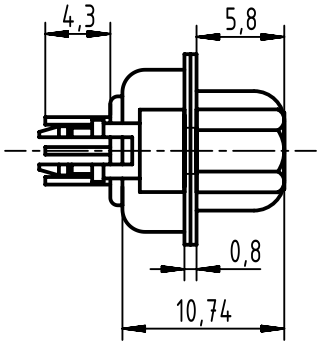

PC-Board layout
view component side
thickness 1,6 mm

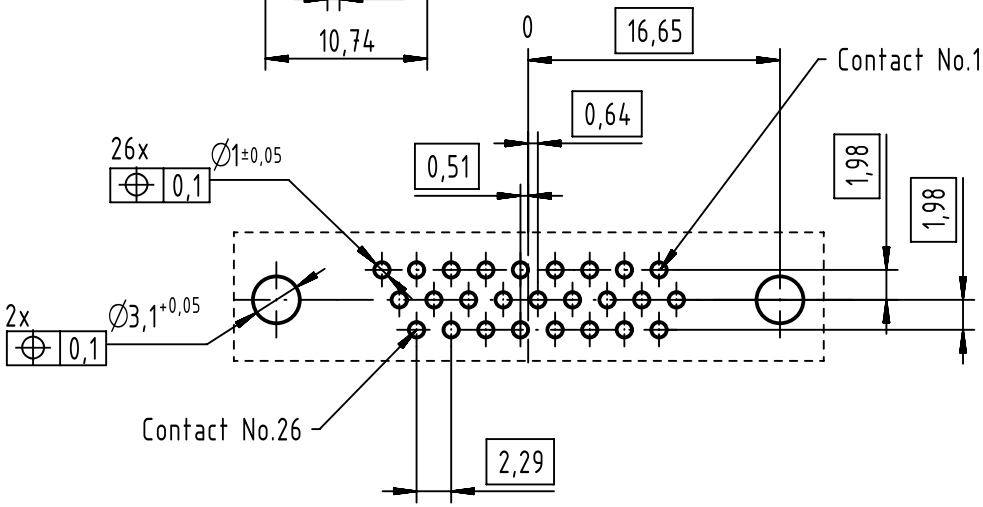

09562515513	S4
09562517513	3
Part number	Performance level

All Dimensions in mm
Original Size DIN A4

Scale 2:1

Free size tol.

Ref.

Sub.

All rights reserved

Department EL PD

HARTING Electronics GmbH
D-32339 Espelkamp

Created by	Inspected by	Standardisation	Date	State
ZHUANGJ	ZENGD	HOFFMANN	2020-05-29	Final Release

Title D-Sub HD 26P female straight screw locks

Doc-Key / ECM-Nr.
100513332/UGD/001/C
500000173538

Type TB

Number 0956251X513

Rev. C

Page 1/1

A4