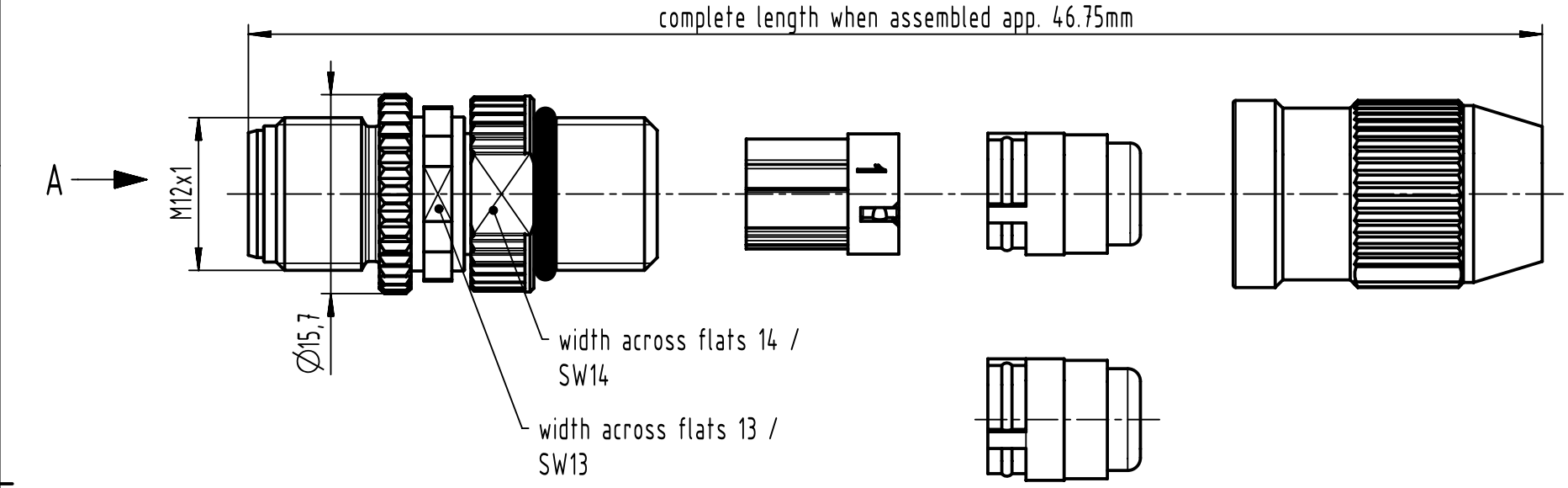

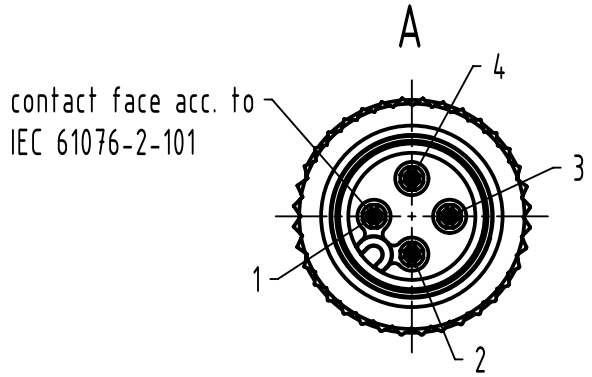

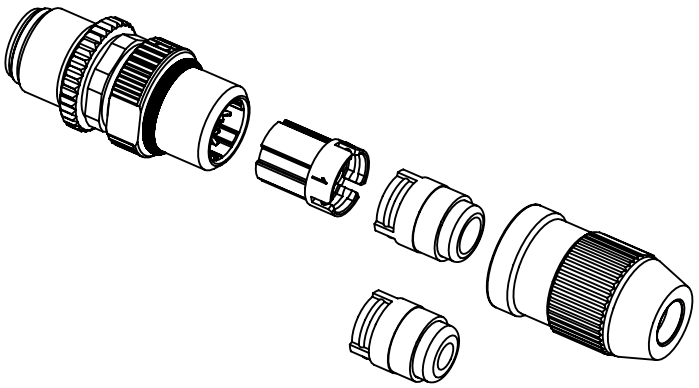

conductor cross section	cable outside diameter
0.14 - 0.34mm² AWG26-AWG22	2.9 - 5.1mm

All Dimensions in mm
Original Size DIN A4

Scale 2:1

Free size tol.

Ref.

Sub.

All rights reserved

Department EL PD

HARTING
D-32339 Espelkamp

Created by	Inspected by	Standardisation	Date	State
EISFELD	104122		2022-06-22	Final Release

Title M12-S-CC-IDC-4P-ACOD-M-STR

Doc-Key / ECM-Nr.
100228396/UGD/002/D
500000219613

Type TB

Number 21031111405

Rev. D

Page 1/1

A4