Alle Rechte vorbehalten/ *All rights reserved*

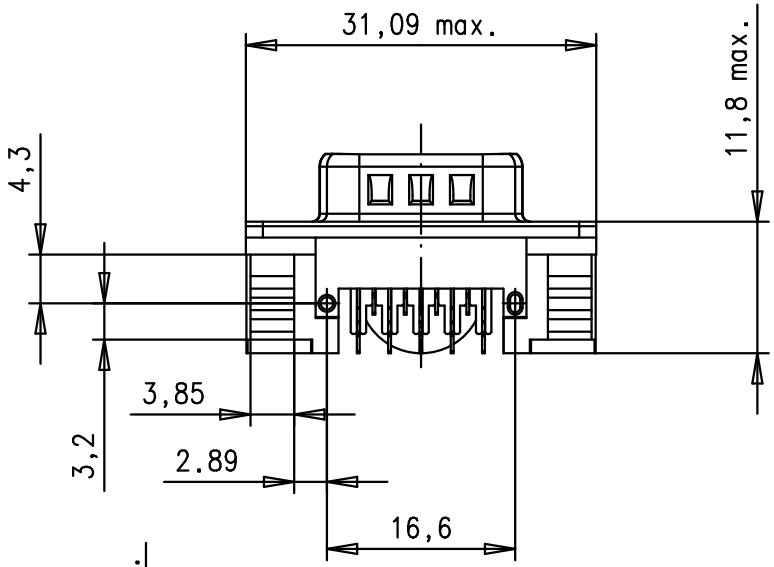

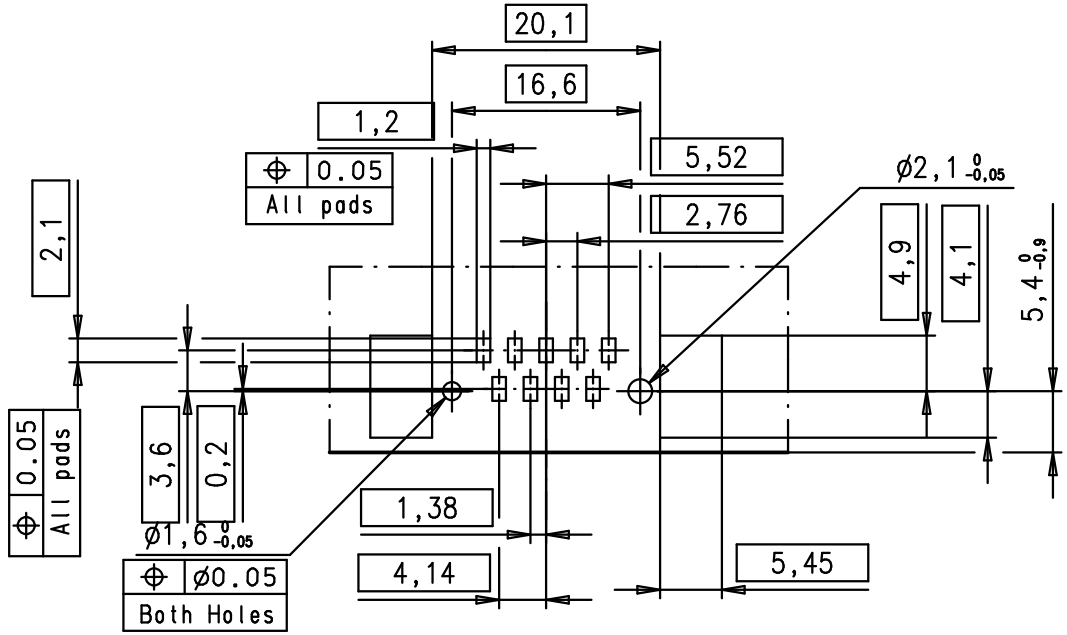

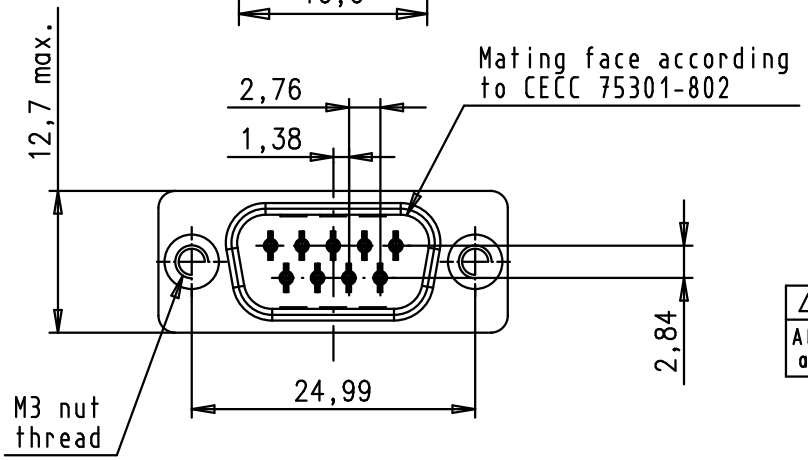

PCB Layout, component side (thickness 1.6 mm min.)

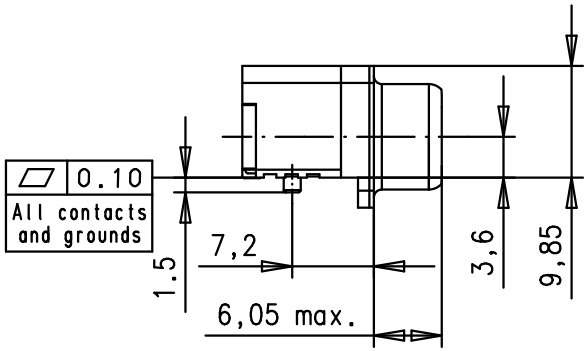

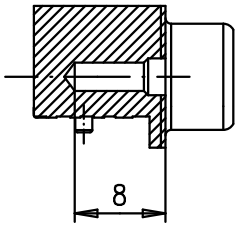

Max. Temperature : 260° during 10 seconds

Part number	PL	Thread	Index designation		Mod.	Dat.	Name
09551663815.741	1	M3	Black Insulator	Reel Packaging (160 connectors) see page 2/2	ECO1215	14Jan2010	ED
09551666815.741	2				34884	18Feb2008	LP
09551667815.741	3				34377	13Jul2007	ED

	Dat.	Name
Detail.	13Jul2007	ED
Insp.		
Stand.		

All Dim. in mm
Orig. Size DIN A 4

D-SUB SMT
Low Profile Male 9p
with die casted grounds
and M3 nuts

Maßstab/ *Scale* 1,5:1

HARTING EURL
F-95972 Paris

TB 09 55 166 x815

Sub.

Blatt/ *Page* 1/2

Released / Freigegeben 2010/01/25-15:27:45 UTC