Connector Location A

Connector Location B

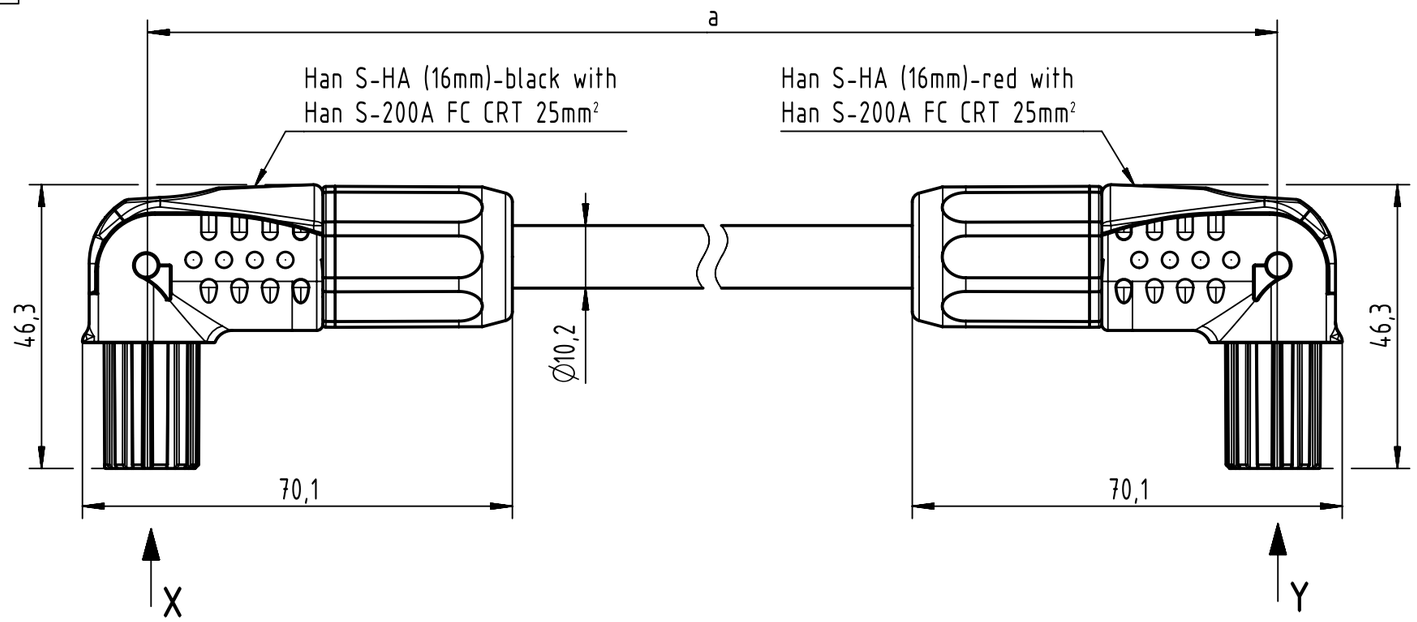

X
female

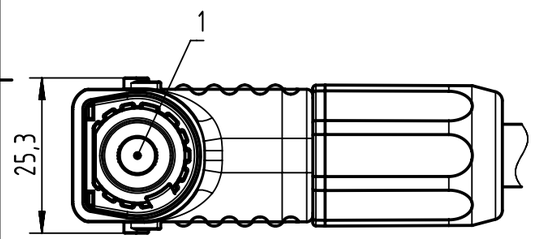

Loading Plan

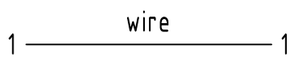

Y
female

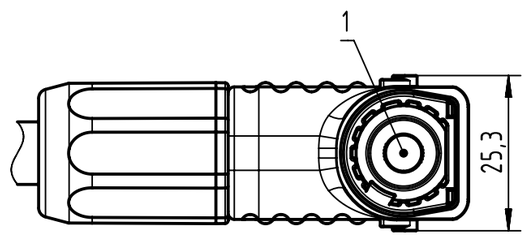

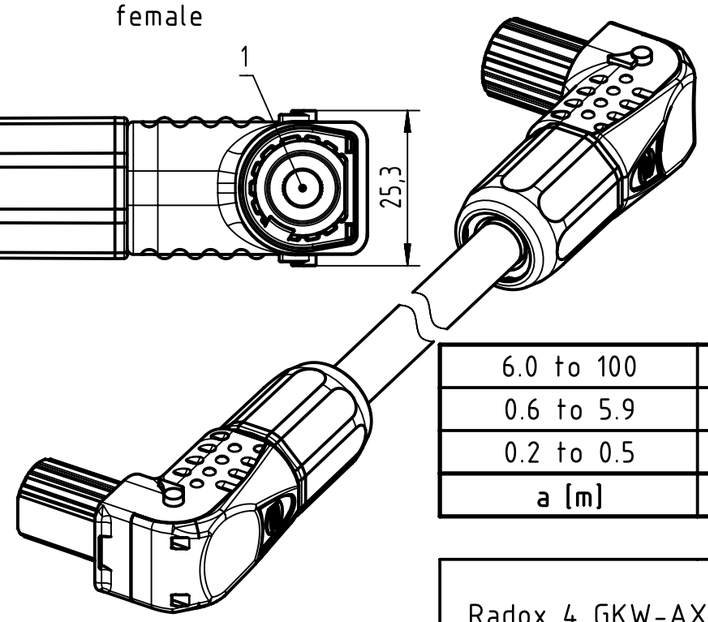

6.0 to 100	±1%
0.6 to 5.9	+0.04
0.2 to 0.5	+0.02
a [m]	Tolerance

length in "1m" step	100	XXX=000
	99	XXX=990
	⋮	⋮
	12	XXX=120
	11	XXX=110
length in "0.1m" step	10	XXX=100
	9.9	XXX=099
	9.8	XXX=098
	⋮	⋮
	0.5	XXX=005
	0.4	XXX=004
	0.3	XXX=003
	0.2	XXX=002
Step	a [m]	XXX

Radox 4 GKW-AX 25 sqmm, black	33506869248XXX
Type of cable	Part no.

NOTE:
* For lengths < 1.0m:
- relative positioning of the connectors to each other will be as presented in the drawing, however with an admissible angular deviation around cable axis of ± 10°
* For lengths ≥ 1.0m:
-relative positioning of the connectors to each other not obligatory
* Protection level: IP40
* Temperature range: -40°C ... +120°C

All Dimensions in mm	Tech. Character.	Free size tol.		According to production drawing

All rights reserved

Department HCS - RO	Created by COSTEA Costea	Inspected by 402676 Gross	Standardisation MUNTEANV Muntean	Date 2023-01-31	State Final Release
HARTING Customised Solutions D-32339 Espelkamp	Title Han S 200 CA-c-b/r 25mm²			Doc-Key / ECM-Nr. 100949193/UGD/000/C 500000234324
	Type TB	Number 33506869248XXX	Rev. C	Page 1/1

A3