Alle Rechte vorbehalten/ *All rights reserved*

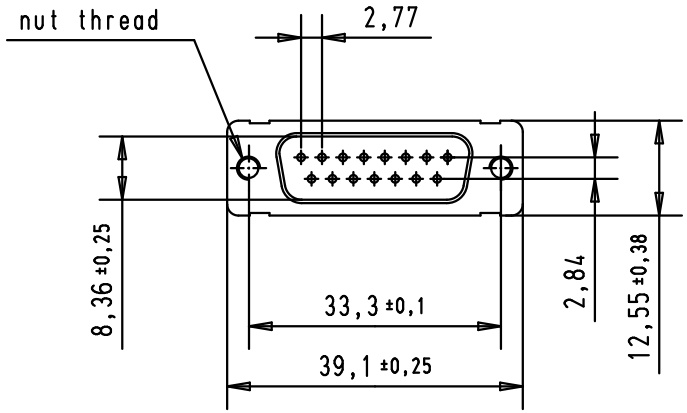

RECOMMANDED PANEL CUTOUT DIMENSIONS
FOR REAR MOUNTING

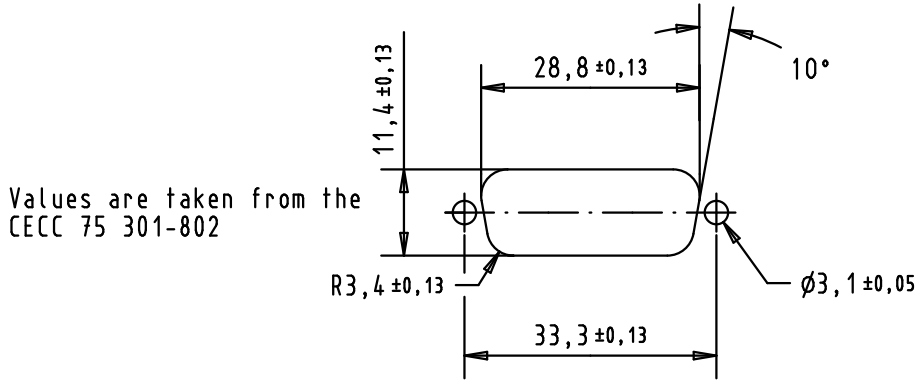

Values are taken from the
CECC 75 301-802

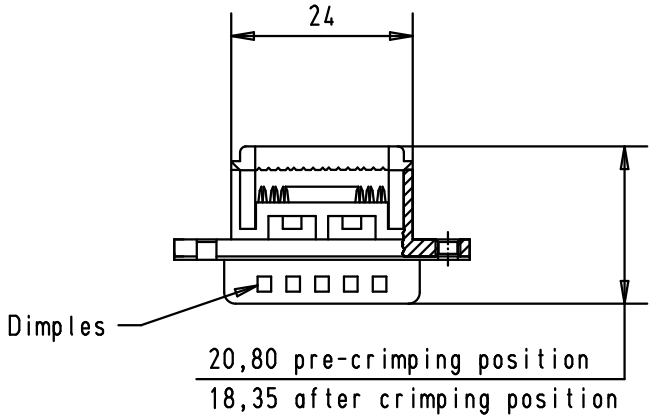

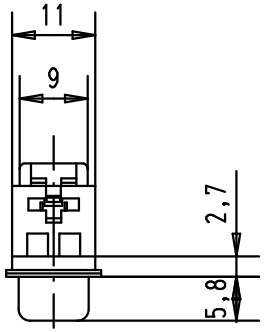

1.27 mm pitch flat cable stranded, wire sizes : AWG 26 to 28

part number	performance level	Nut thread
09 66 228 7702	PL3	4-40 UNC
09 66 228 6702	PL2	4-40 UNC
09 66 228 7701	PL3	M3
09 66 228 6701	PL2	M3

Mod.	Dat.	Name
EC03837	23-SEP-11	BH
EC01902	21-MAY-10	SC
29756	19-MAR-02	CV

	Dat.	Name
Detail.	19-MAR-02	CV
Insp.	23-SEP-11	JB
Stand.		

All Dim. in mm
Orig. Size DIN A 4

D-sub, male, 15 poles, straight, IDC, nut fixing

Maßstab/ *Scale* 1 : 1

HARTING EURL
F-95972 Paris

TB 09 66 228 x70x

Sub.

Blatt/ *Page* 1 / 1