Connector Location A

Connector Location B

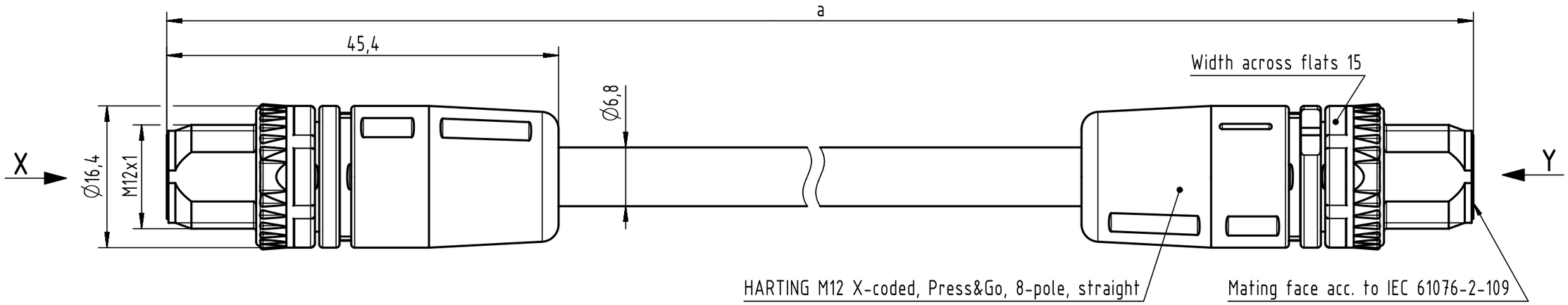

X
male

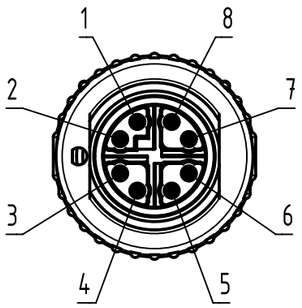

Loading Plan
acc. to TIA/EIA 568B

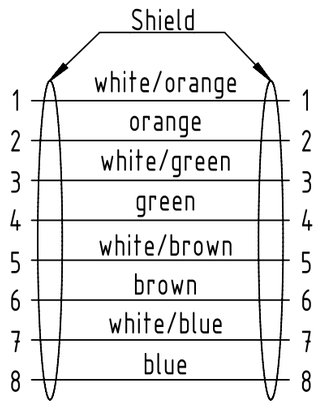

Y
male

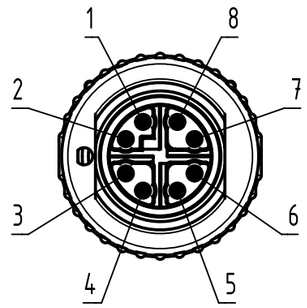

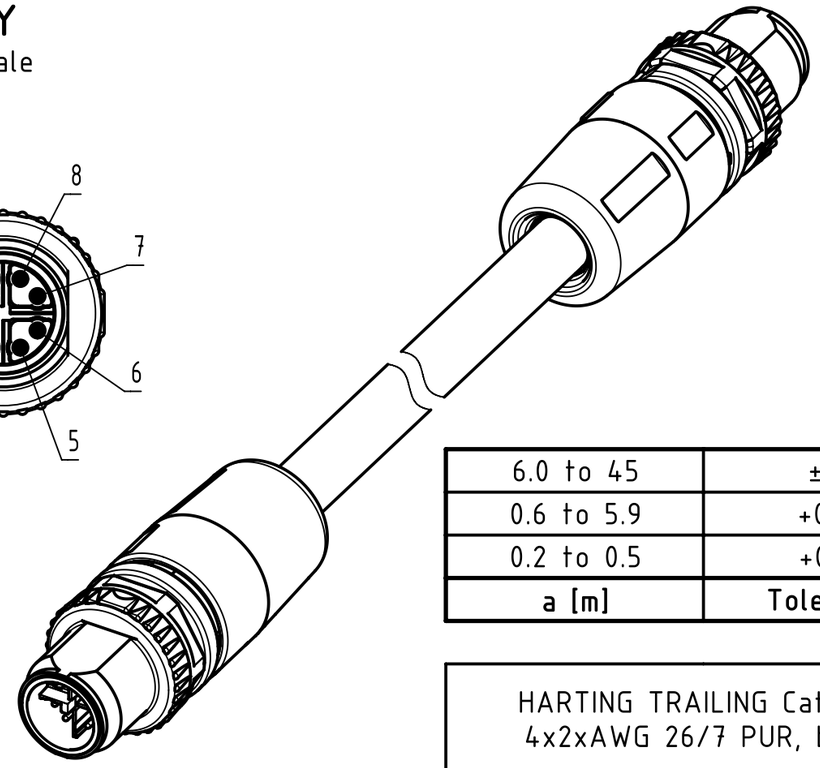

length in "1m" step	45	XXX=450
	44	XXX=440
	⋮	⋮
	12	XXX=120
	11	XXX=110
length in "0.1m" step	10	XXX=100
	9.9	XXX=099
	9.8	XXX=098
	⋮	⋮
	0.5	XXX=005
	0.4	XXX=004
	0.3	XXX=003
	0.2	XXX=002
Step	**a [m]**	**XXX**

6.0 to 45	±1%
0.6 to 5.9	+0.04
0.2 to 0.5	+0.02
a [m]	**Tolerance**

HARTING TRAILING Cat. 6A, 4x2xAWG 26/7 PUR, black	21330505862XXX
Type of cable	**Part no.**

- Protection level: IP65/67
- Temperature range: -40°C ... +70°C

All Dimensions in mm	Tech. Character.	Free size tol.		According to production drawing
All rights reserved	Created by COSTEA Costea	Inspected by STOCHECIC Stocheci	Standardisation MUNTEANV Muntean	Date 2019-12-17	State Final Release
Department HCS - RO	Title M12 X-cod st/st m/m PUR Trail			Doc-Key / ECM-Nr. 100861826/UGD/004/A 500000161062
HARTING Customised Solutions D-32339 Espelkamp	Type TB	Number 21330505862XXX	Rev. A	Page 1/1

A3